Design A Noninvasive Digital Blood Pressure Meter Using High Sensitivity Pressure Gauge MPX5050GP

Anwar Mujadin [1)], Putra Wijaya Kusuma [2)]
[1,2] Department Electrical Engineering, Faculty of Science and Technology, University of Al Azhar Indonesia
Komplek Masjid Agung Al Azhar, Jl. Sisingamangaraja, Jakarta 12110

Abstract—**In this paper is discussed at the development of noninvasive, high precision, continues blood pressure measurement using factor calibration for eliminated signal conditioning. We developed a low cost noninvasive blood pressure (NIBP) measurement system using high sensitivity pressure gauge MPX5050GP which uses the behavior mercury sphygmomanometer. Systolic blood pressure (SBP) and diastolic blood pressure (DBP) can be computed by using time difference between blood flow velocities in vein. From experiments result, MPX5050GP have possession of accuracy 0.01187 volts for each step 1 mmHg with relative error under 7%.**

Keywords—**Noninvasive blood pressure measurement (NIBP), MPX5050GP High Sensitivity Pressure Gauge, NIBP Monitoring using PC.**

I. INTRODUCTION

Blood pressure is indicators of a healthy cardiovascular system. The measurement of blood pressure is important in the diagnosis and monitoring of a wide range of clinical conditions. The normal blood pressure of adult (male and female) is about 120/80 till 140/90 mmHg, if it is too high or too low means not good for health.

Sphygmomanometer is blood pressure measurement device. Sphygmomanometer is divided into two types: conventional and digital. Currently many people use the digital version of sphygmomanometer, it is easy to use but has some weaknesses, it cannot be manually calibrated, difficult to repair, and not as accurate as the conventional one.

To overcome that weaknesses, in this research is design a prototype of digital sphygmomanometer using Arduino Mega2560 and pressure sensor MPX5050GP. This research used experimental method to get the data to be analyzed.

II. BASIC THEORY

A. Pressure Sensor MPX5050GP

Pressure sensor MPX5050GP is a piezo resistive transducer which is made from monolithic silicon and designed for various applications, especially application using microcontroller or microprocessor with A/D inputs. Pressure sensor MPX5050GP has integrated pressure sensor 0 to 50 kPa (0 to 7.25 psi) achieve pressure between 0 mmHg to 375 mmHg and it has internal op amp for signal condition [1]. This pressure sensor has 6 pins as shown in the figure 1.

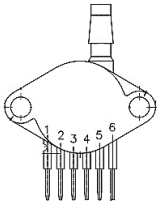

Figure 1. Pin and terminal arrangement of pressure sensor MPX5050GP [1]

The sensor pin configuration is as follows. Pin 1 is pin Vout, it is used for voltage output. Pin 2 is Ground. Pin 3 is for VCC. Pin 4 V1. Pin 5 is V2, and pin 6 which is used VEX. This pressure sensor MPX5050GP use differential metode to gauge the air pressure and use piezoresistive technology to convert air pressure become electric signal. This sensor work with 4,75 V to maximum 5,25 V and could measure the pressure between 0 to 50 kPa with the sensitivity of 90 mV/kPa. 1 Pa equal to 0.0075 mmHg so its allowing the measurement between 0 to 375 mmHg with the sensitivity about 12 mV/mmHg [1].

B. Op-Amp LM324

Op-amp in this research will be used as non-inverting amplifier. The input voltage signal is applied directly to the non-inverting (+) input terminal which means that the output gain of the amplifier is positive for the value. The result of this is the output signal is in-phase with the input signal [2]. Non-inverting amplifier circuitry is shown in figure 2.

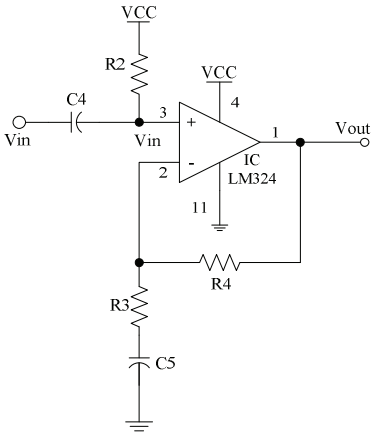

Figure 2. Non-inverting amplifier circuitry [2]

C. First-order High Pass Filter Circuit

In this research will be used High Pass Filter circuitry, this to let the blood pressure and heart pulse signal which the frequency is above 1 Hz. The circuitry is a high pass filter circuitry using op-amp and in first order. The high pass filter circuitry is shown in the figure 3 [3].

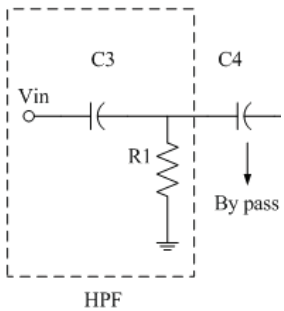

Figure 3. First-order high pass filter circuitry [3]

The cut-off frequency can be find by using the equation as follows [3]:

$$fc = \frac{1}{2\pi R1C3} \tag{1}$$

Voltage gain in decibel can be find by using the equation as follows [3]:

$$\text{Voltage Gain } (A_V) = \frac{Vout}{Vin} = \frac{A_F\left(\frac{f}{fc}\right)}{\sqrt{1+\left(\frac{f}{fc}\right)^2}} \tag{2}$$

$$A_V(dB) = 20\log_{10}\left(\frac{Vout}{Vin}\right) \tag{3}$$

$$-3dB = 20\log_{10}\left(0.707\frac{Vout}{Vin}\right) \tag{4}$$

D. The Concept of Oscillometric Method

This method is employed by the majority of automated non-invasive devices. The handcuff which can be pump with the air untill the desired pressure, then the sensor will detect the pressure signal from handcuff to converted as a systolic and diastolic value using microcontroller. The simplified measurement principle of the oscillometric method is a measurement of the amplitude of pressure change in the cuff as the cuff is inflated from above the sytolic pressure. As the pulse breaks though the occlusion, the amplitude suddenly grows larger and this is very close to systolic pressure. And when the cuff deflated, the pulsation increase amplitude, reaches a maximum and then diminished rapidly. The diastolic pressure index is when the rapid transition begins. To obtaining the sytolic and diastolic blood pressure, need to be identifying the regionwhere there is rapid increase then decrease in the amplitude of the pulses respectively. At the point of the maximum oscillation is where the Mean Arterial Pressure (MAP) located [4]. The cuff pressure signal of the pressure sensor output is shown in the figure 4.

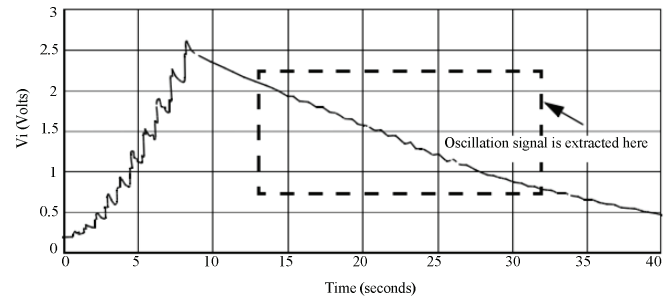

Figure 4. The cuff pressure signal of the pressure sensor output [4].

Figure 4 is shown the sample signal of the pressure sensor output according to time variable when the cuff is pumped on a certain pressure and then deflated till the air flow away from the cuff. This signal is procces by high pass filter to eliminate the signal on frequency 0.04 Hz (cuff's frequency) and let the 1 Hz signal (blood pressure frequency). The MAP can be seen after extracted the oscillation signal [4].

E. United States Patent (No. 4.949.710)

Method of Artifact Rejection for Noninvasive Blood-pressure Measurement by Prediction and Adjustment of Blood-pressure Data. In this final project would be used one of U.S. Patent to obtain the systolic and diastolic blood pressure value. This invention pertains to an improvement in artifact-rejection methods for noninvasive blood pressure measurement, and more particularly, to a unique method of predicting, from acquired data, subsequent, expected data values.

An important object of the invention, therefore, is to provide for artifact rejection in a unique way which ensure that accepted pressure waveforms truly are blood pressure induced. In this patent device, the microprocessor is directed by a program to determine desired blood pressure parameters by what has previously been described as determiner. First, the microprocessor determines MAP as the lowest counter pressure level with the greatest final area data value. Further, the microprocessor determines the systolic and diastolic pressure of subject. Systolic pressure is determined herein as the counter pressure level above MAP that is sixty percent of the MAP. And diastolic pressure is eighty percent of the value of the MAP [5].

In this research will be used this patent method as a reference with some changes. MAP will be determined by the microcontroller as the highest counter pressure level with the greatest final area data value. So, the systolic pressure will be determined as the counter pressure level below MAP that is eighty percent of the MAP. And Diastolic pressure is sixty percent of the value of the MAP. It is as shown in the equation [5]:

$$SBP = MAP \times 0.8 \tag{5}$$

$$DBP = MAP \times 0.6 \tag{6}$$

III. HARDWARE SCHEME

This system consists of eight parts: a main board pressure sensor MPX5050GP, a microcontroller Arduino Mega 2560, matrix LCD 16 x 2, a switch, a set of traces mechanical material from digital sphygmomanometer (air pump, solenoid valve, venous suppression), 5 VDC switching power supply, optical serial port multimeter (GW Instek GDM396) and last a laptop for data acquisitions and monitoring. The concept of prototype design is described using block diagram which will determine all feature of it. Block diagram prototype is shown in figure 5.

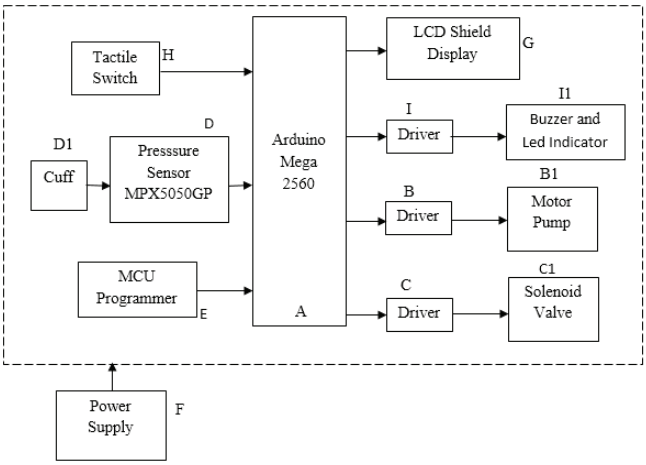

Figure 5. Block diagram of prototype

Main board of pressure sensor MPX5050GP has created to Arduino shield which is superimposed together matrix LCD 16 x 2. The shield Arduino pressure sensor be equipped by integrated circuit operational amplifiers (OpAmp) as signal amplified and noise filter. The Circuit diagram of pressure sensor MPX5050GP is shown in figure 6.

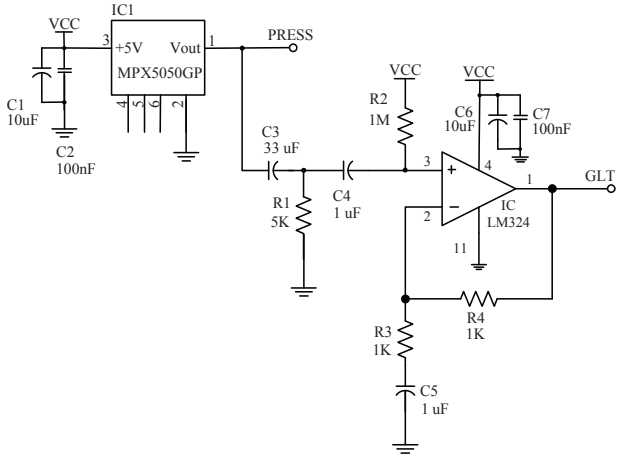

Figure 6. Circuit diagram of pressure sensor MPX5050GP

The prototype of digital sphygmomanometer using Arduino Mega 2560 with MPX5050GP pressure sensor is shown in figure 7.

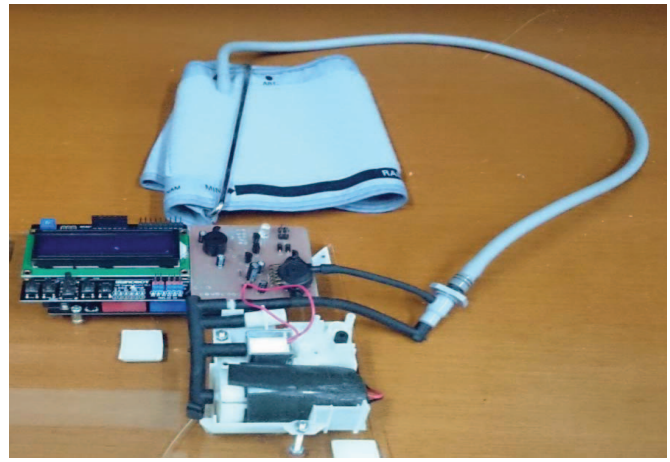

Figure 7. The prototype of digital sphygmomanometer using Arduino Mega 2560 with MPX5050GP pressure sensor

IV. RESULT AND ANALYSIS

A. First-order High Pass Filter Circuitry Testing

The active high pass filter first order has a gain AF that increases from 0 Hz to the low frequency cut-off point, fc at 20 dB/decade as the frequency increases. The cut-off frequency of the high pass filter can be find by using the equation (1) as follows:

$$fc = \frac{1}{2x3.14x5x10^{3}x33x10^{-6}} = 0.965Hz \approx 1Hz$$

The pass band gain of the circuit is generally expressed in decibels or dB as a function of the voltage gain, the data for the frequency response bode plot can be obtained by substituting the values that has obtained over a frequency range from 0.1 Hz to 100 Hz. The frequency response data from the table above is shown in the plotted in the figure 8.

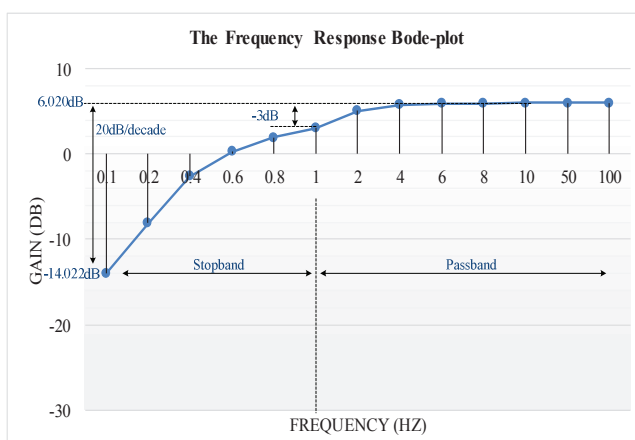

Figure 8. The high pass filter response bode plot

B. Characterization Pressure Sensor MPX5050GP

The pressure sensor MPX5050GP testing is done by comparing the output voltage to mercury sphygmomanometer (mmHg) reading scale. The test is done to know the linearity of the pressure sensor MPX5050GP detection result. The motor pump and solenoid valve on sensor board of prototype is set to off. The hose from motor and solenoid is connected parallel to the hose of mercury sphygmomanometer. The output pin of sensor MPX5050GP is connected to multimeter GW Instek GDM-396 to read the voltage output. At the range of 4 volt, the multimeter has 0.001-volt resolution and accuracy ± (0.8% + 1). The configuration of sensor and mechanical board parallel to sphygmomanometer is shown in figure 9.

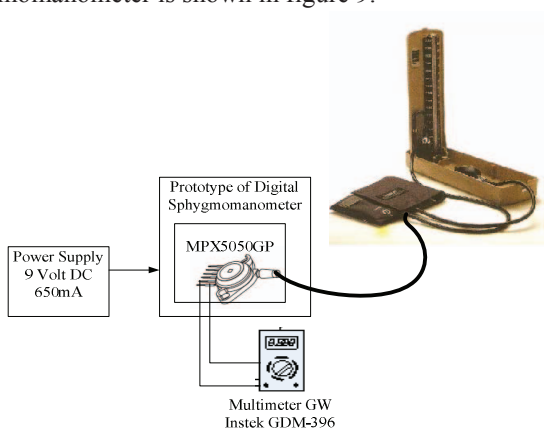

Figure 9. The configuration of sensor and mechanic board parallel to mercury sphygmomanometer

From the measurement testing result of pressure sensor MPX5050GP can be seen that the voltage is change gradually according to pressure mmHg changes. Found that the value change in y axis divided the value change in x axis or called gradient is 0.01187 and the y axis intercept is 0.176. It is mean that the sensor has the accuracy of 0.01187 volt every 1 mmHg step. And since the 0 mmHg is equal to 0.176 volt, so every 1 mmHg is equal to the voltage read minus by 0.176 and divided by 0.01187. Pressure sensor output voltage compares to mercury scale is shown in figure 10.

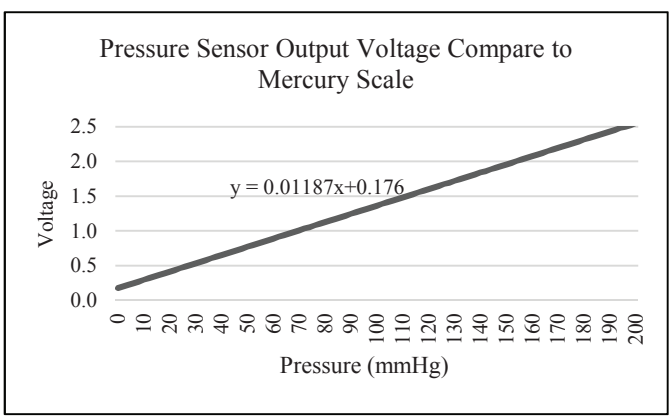

Figure 10. The pressure sensor output voltage compares to mercury scale

C. ADC Database from Sensor MPX5050GP Testing Result.

The ADC database is made to be used in programming. The purpose is making this research prototype can be easily recalibrated. The result data from testing the pressure sensor MPX5050GP output voltage compare to mercury sphygmomanometer mmHg reading scale is in voltage and mmHg unit and need to be converted to ADC data. The range of ADC converter is 0 to 1023 counts. VRH and VRL are the reference voltage inputs to the ADC converter. The resolution is defined by the following:

Count = [(V Measure – VRL)/ (VRH – VRL)] x 1023
The count at
10 mmHg = [(0.310 – 0)/ (2.5 – 0)] x 1023 ≈ 127
The count at
196 mmHg = [(2.5 – 0)/ (2.5 – 0)] x 1023 ≈ 1023
Therefore
The resolution = 1023 -127 = 896 counts Calibration factor
For voltage = 2.5 / 1023 = 0.00244379276637341

By using this, every 1 counts under 1023, the voltage from 2.5 volt will be minus by 0.00244379276637341. For the range of mmHg also need to be calibrated since it will read per count. Calibration factor for MmHg is defined by the following:

Calibration Factor is:
For mmHg = (196 – 10) / 896 counts = 0.2075

This translates to a system that will resolve to 0.2075 mmHg. To keep using less memory, the database is converted to formula. ADC data which is read converted to mmHg and directly save to RAM, the formula is defined by the following:

For mmHg = (196 – 10) / 896 counts = 0.2075

Every ADC data which is read is converted to mmHg and directly saved to RAM as array start from byte 1 and so on, and will be used in the next step to be extracted using another formula. The extracted data come from mmHg which is save in RAM. The extracted data will also be saved to RAM, the first byte of extracted data is initiation, the calculation start from the second byte. The extraction data is defined by the following:

Byte (n+1) of extraction data = byte (n) mmHg – byte (n+1) mmHg

For example, if byte 2 of mmHg is 195.793 mmHg and byte 3 is 192.473 mmHg, the byte 3 of extraction data is, 195.793 mmHg – 192.473 mmHg = 3.320.
The extraction data is used to find the MAP, because the highest value of the extraction data is MAP. The extraction data is saved or stored to RAM as an array, then finding the highest value of it.
After finding the MAP or highest value from extracted data, the last step to determine the systolic blood pressure (SBP) and diastolic blood pressure (DBP) is to calculate the MAP value using the formula which are shown in the equation (5) and

equation (6). From the equation, the value of systolic blood pressure and diastolic blood pressure can be determined and the blood pressure measurement is done.

D. The Blood Pressure Measuring Result Using Prototype Connected to Multimeter GW Instek GDM-396

As the result of the measurement that appear on prototype's LCD is the value of systolic and diastolic only, so in this testing is again used the Multimeter GW Instek GDM-396 to read the voltage output at the output pin of sensor MPX5050GP. The Multimeter GW Instek GDM-396 is connected to computer using RS232 serial cable and the reading data is shown in its dedicated software, GDM-396 interface program V.1. This is done to get the graph of the measurement. The configuration of prototype and the multimeter GW Instek GDM-396 in measurement is shown is the figure 11.

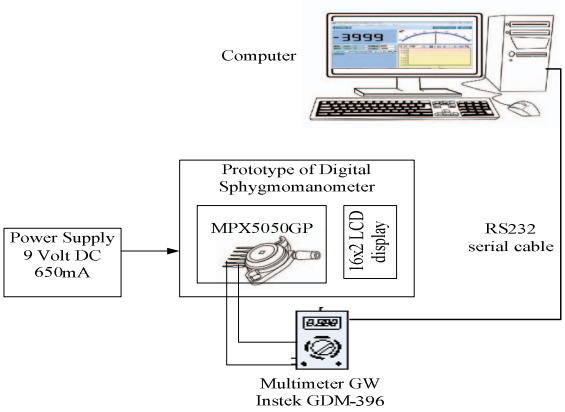

Figure 11. The configuration of prototype and multimeter GW Instek GDM-396 in measurement

The subjects on this testing are four person that will be measured their blood pressure. The result of each subject is described in table and also graph. The data of measuring result using prototype connected to Multimeter GW Instek GDM-396 can be seen in the table 4.1.

Table 4.1 The measuring result using prototype connected to multimeter GW Instek GDM-396

Subject	Age (Year)	Blood Pressure Measuring Result of Prototype (mmHg)		Classification
		SBP	DBP	
1	48	151	114	Stage 2 hypertension
2	25	118	88	Normal
3	24	101	76	Normal
4	23	111	83	Normal

Below will be explained one of the four subjects as an example to see the graph, it is subject one. From the table and refer to the database, the MAP from the extracted data is 6.018 in the byte 3 or equal to 189.360 mmHg. From the MAP value, the Systolic and Diastolic value is determined as 151/114 mmHg, the result show the same value as the display. The graph of the blood pressure measuring data of first subject 1 is shown in the figure 12 (a) and figure 12 (b).

From the figure 12(a) can be seen that after reaching the MAP, the blood pressure is decreasing with the high bounce, it is because this area is systolic area with high blood pressure. After reaching extracted value about 1 mmHg, the blood pressure is become stable, it is happened after diastolic phase, where there is no more high bounce.

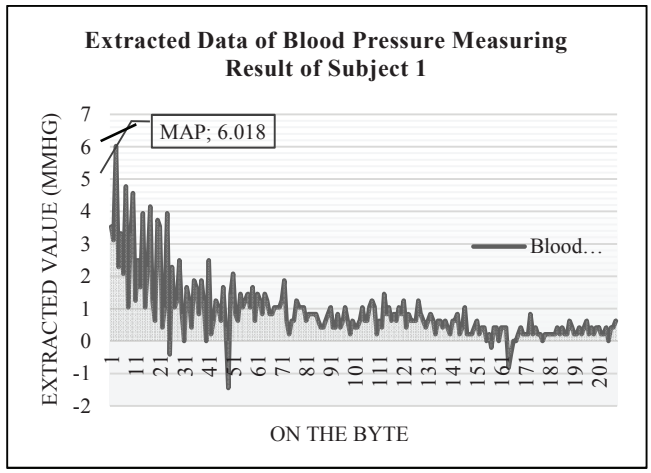

Figure 12 (a). The extracted data from voltage conversion of blood pressure measuring result of subject 1 taken using the multimeter GW Instek GDM-396

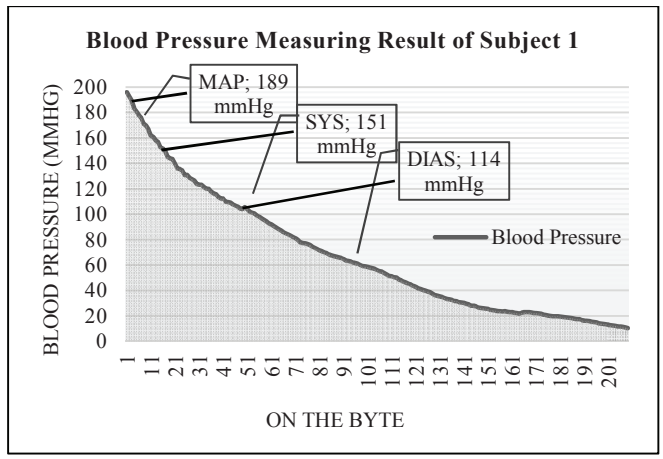

Figure 12(b). Blood pressure measuring result of subject 1

III. CONCLUSION

From the testing result and analysis, the conclusions are as follows:

a. The prototype has the measurement range from 10 mmHg to 157 mmHg, for the blood pressure classification it can be used to measure low blood pressure (<90 systolic or <60

diastolic) until stage 2 hypertension blood pressure (≥ 100 diastolic).

b. The prototype is accurate to measure the normal and prehypertension blood pressure with the relative error is under 7%. The prototype is not accurate to measure the stage 2 hypertension and approaching low blood pressure because the relative error is above 9%.
c. The prototype can be recalibrated. The recalibration needs about 140 minutes or 2.3 hours until the prototype can be properly operated or used again. The time spent can be varying according to the knowledge of the operator.
d. The pressure sensor MPX5050GP is suitable for the prototype sensor. The output voltage of the sensor compare to mercury scaled (mmHg) is linear. The linearity of the sensor is, y = 0.01187x+0.176. The sensor has the accuracy of 0.01187 volt for every 1 mmHg step. Since the 0 mmHg is equal to 0.176 volt, so every 1 mmHg is equal to the voltage read minus by 0.176 divided by 0.01187.
e. ADC conversion database from the pressure sensor MPX5050GP testing result is really important to make the prototype to be recalibrated easily by changing the value of its data.

Generally the result of this research can be used to measure the blood pressure. The prototype can measure the normal and prehypertension blood pressure accurately, but inaccurate when measuring the stage 2 hypertension and approaching blood pressure. The calculation to determine systolic and diastolic based on U.S. Patent (No. 4.949.710) with some modification and also the ADC conversion database make the sensor can recalibrated easily by comparing its voltage output with the mmHg scale of reference such as mercury sphygmomanometer. The prototype consist integrated board join together make it easy to repair and maintenance

ACKNOWLEDGMENT

The project is funded by research institute and community service (LP2M) University of Al Azhar Indonesia, and has implemented in signal and system experimental laboratory in Electrical Engineering Department.
Author would like to the all people for the support rendered during research.

REFERENCES

[1] Freescale Semiconductor. (2007). *MPX5050 Series Datasheet*. Accessed on 12th May, 2014. http://www.freescale.com/support.
[2] Texas Instruments. (2015). Handbook of Operational Amplifier Applications. Accessed on 30th April, 2016. www.ti.com/lit/an/sboa092b/sboa092b.pdfFamosa Studio. *LCD Keypad Shield for Arduino*. Accessed on 16th May, 2014. http://www.famosastudio.com/lcd-shield.
[3] Vigneshwaran, S. (2016). Design and Analysis of Active High Pass, Low Pass & Band Pass Butterworth Filters Using LM741. Prosseding IJSE Volume 6 Issue No. 4, 2016.
[4] R. Mukkamala, J.-O. Hahn, O. T. Inan, L. K. Mestha, C.-S. Kim, H. Toreyin, et al., "Toward Ubiquitous Blood Pressure Monitoring via Pulse Transit Time: Theory and Practice," Biomedical Engineering, IEEE Transactions on, vol. 62, pp. 1879-1901, 2015.
[5] Dorsett, Thomas j., Davis, Charles L. (1990). *Method of Artifact Rejection for Noninvasive Blood-pressure Measurement by Prediction and Adjustment of Blood-pressure Data*.United .U.S patent document: United State.